WORLDWIDE ELECTRIC MOTOR DATA SHEET

ODP1.5-36-143TC

HORSEPOWER	**1.5**		
RPM / POLES	**3600 / 2**		
VOLTAGE / PHASE	**230 / 460 V / 3**		
FRAME	**143TC**		
ENCLOSURE / DEGREE OF PROTECTION	**ODP/ IP23**		
FREQUENCY	**60 HZ**		
FULL LOAD SPEED	**3466 RPM**		
SERVICE FACTOR	**1.15 SF**		
INSULATION CLASS	**F**		
FULL LOAD AMPS; 230 / 460	**3.8 / 1.9 A**		
LOCKED ROTOR AMPS (STARTING); 230 / 460	**35.46 / 17.73 A**		
NO LOAD CURRENT	**1.72 / 0.86 A**		
NEMA CODE LETTER	**L**		
EFFICIENCY / POWER FACTOR	LOAD	EFF.	P.F.
	100%	**84.0%**	**0.85**
	75%	**85.0%**	**0.79**
	50%	**83.2%**	**0.68**
DUTY CYCLE	**S1 / Continuous**		
TORQUE	FULL LOAD	LRT	BDT
	2.23lb.ft.	**495%**	**399%**
SLIP	**3.715%**		
NEMA DESIGN	**B**		
NUMBER OF STARTS (Hot / Cold)	**2 Hot / 3 Cold**		
MAX. AMBIENT TEMPERATURE	**40° C**		
MAX. ELEVATION	**3300 Ft. Above Sea Level**		
TEMPERATURE RISE (At Full Load)	**80° C**		
DE BEARING	**6205ZZ**		
ODE BEARING	**6204ZZ**		
GREASE TYPE	**NS7 ENS**		
MOUNTING	**F1**		
ROTATION	**Bi-Directional**		
APPROXIMATE WEIGHT	**32 lbs.**		
AREA CLASSIFICATION	**Non-Hazardous**		
INVERTER RATING	**10:1 CT / 20:1 VT PWM Type**		
SPECIFICATION - In Accordance With	**NEMA, UR**		

CC306B ENERGY E309286

May 9, 2023

WORLDWIDE ELECTRIC MOTOR DRAWING

ODP-143TC

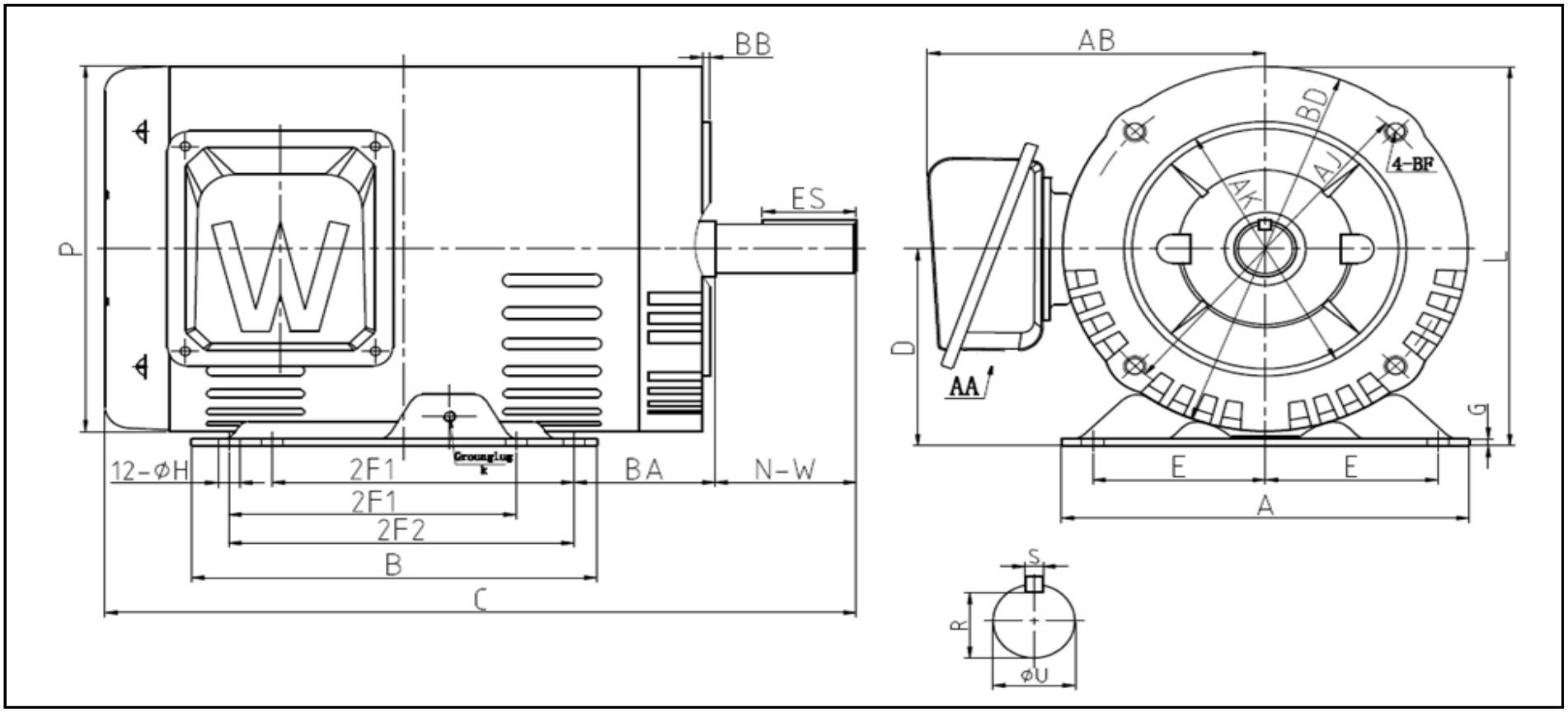

DIMENSIONS - INCHES

MOUNTING														
E	2F1	2F2	H	BA	A	B	C	D	G	P	L	AB	BB	AA
2.75	4	5	0.34	2.25	6.5	6.5	11.974	3.5	0.118	6.457	6.73	5.384	0.12	1.09

KEY		KEYSET	SHAFT						
S	ES	R	N-W	U	AK	BD	AJ	BF	K
0.188	1.41	0.771	2.25	0.875	4.5	6.5	5.875	3/8-16	M5