DATA SHEET

Premium Efficiency Motor: **LAM5-36-184TC** **60 Hz**

WorldWide Electric Corporation
1 (800) 808-2131
Worldwideelectric.net

Document Generated: 18-Jul-2023
Document ID:

Customer:

MOTOR INFORMATION

HP	5
RPM	3600
Phase	3
Frequency	60 Hz
Voltage	230/460
Frame Size	182/4TC
Enclosure	TEFC
Degree of Protection	IP55
Service Factor	1.25
Poles	2
Full Load Speed	3520
Insulation Class	F
Temp Rise	80°C
NEMA Code Letter	J
Duty Cycle	S1 / Continuous
Slip	2.22%
NEMA Design	B
Moment of Inertia	0.203 lb.ft.^2
Locked Rotor Time (Hot)	12 seconds
Sound Pressure Level	88 dB(A)
Number of Starts	2 Cold/1 Hot
Max Ambient Temperature	40°C
Max Elevation	1000 m.a.s.l (3300 f.a.s.l)
Mounting	F1
Rotation	Bi-Directional
Area of Classification	Class 1 Division 2 Groups A,B,C,D T3B
Inverter Rating	10:1 CT / 20:1 VT
Standard	NEMA MG-1
Approvals	UL, CE, IEEE45, ABS

ADDITIONAL DATA

F2 Suitable	Yes
Shaft Material	AISI 1045
Connection Diagram	9 Lead Wye
Approximate Weight	101.4 lbs.

EFFICIENCY/POWER FACTOR

LOAD	EFF	P. F.
100%	88.5 %	0.89
75%	89.1 %	0.85
50%	87.5 %	0.77

TORQUE

FULL LOAD	LRT	BDT
7.3 lb.ft.	496 %	638 %

AMPERAGE INFORMATION

	230V	460V
Full Load Amps	11.8A	5.9
Locked Rotor Amps	91.2A	45.6A
No Load Current	4A	2A

Usable at 208V 13 A

BEARING INFORMATION

DE Bearing	6306 ZZ
ODE Bearing	6305 ZZ
Grease Type	NSK SN7
DE Regreasing Interval	-- Hours
ODE Regreasing Interval	-- Hours
Grease Quantity	--

This document is the property of WorldWide Electric Corporation and may not be reproduced without express authorization

MOTOR DRAWING

Premium Efficiency Motor: **LAM5-36-184TC**

WorldWide Electric Corporation
1 (800) 808-2131
Worldwideelectric.net

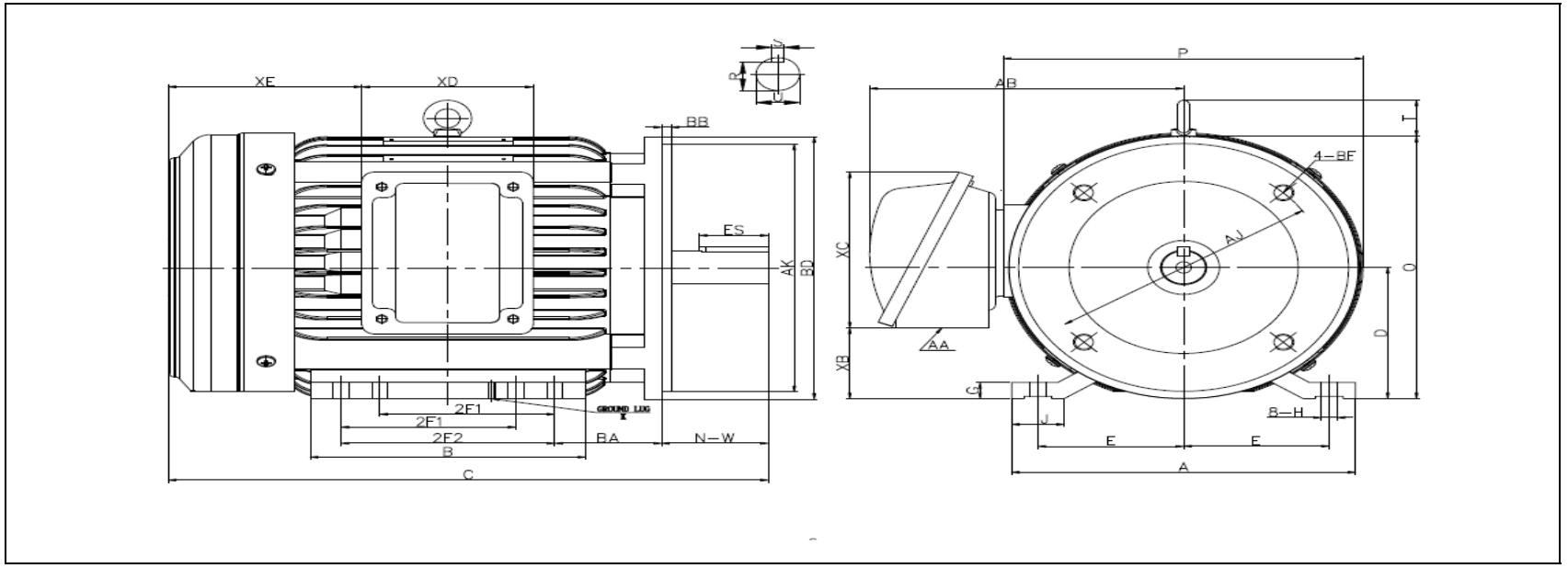

DIMENSION - INCHES

MOUNTING													
E	**2F1**	**2F2**	**H**	**BA**	**A**	**B**	**C**	**D**	**G**	**P**	**O**	**T**	**AB**
3.75	4.5	5.5	0.41	2.75	8.82	7	15.8	4.5	0.64	9.37	9.17	1.4	2.45

SHAFT & KEY				
S	**ES**	**R**	**N-W**	**U**
0.25	1.78	0.986	2.75	1.125

TERMINAL BOX				
AA	**XB**	**XC**	**XD**	**XE**
3/4 NPT	2.45	5.2	4.4	4.9

GROUND LUG
M5

FLANGE				
AK	**BD**	**AJ**	**BF**	**BB**
8.5	9	7.25	4*1/2-13	0.25

This document is the property of WorldWide Electric Corporation and may not be reproduced without express authorization

PERFORMANCE CURVES

Premium Efficiency Motor: **LAM5-36-184TC**

WorldWide Electric Corporation
1 (800) 808-2131
Worldwideelectric.net

Document Generated:	18-Jul-2023
Document ID:	

Customer:

Motor Type	LAM						
Output Rating (HP)	5		FL Speed	3520			
Full Load Torque	7.3	lb.ft	LRT (%FLT)	496	460 volt FLA	5.9	
Rotor Wk^2	0.203	lb-ft^2	BDT (%FLT)	638	230 volt FLA	11.8A	

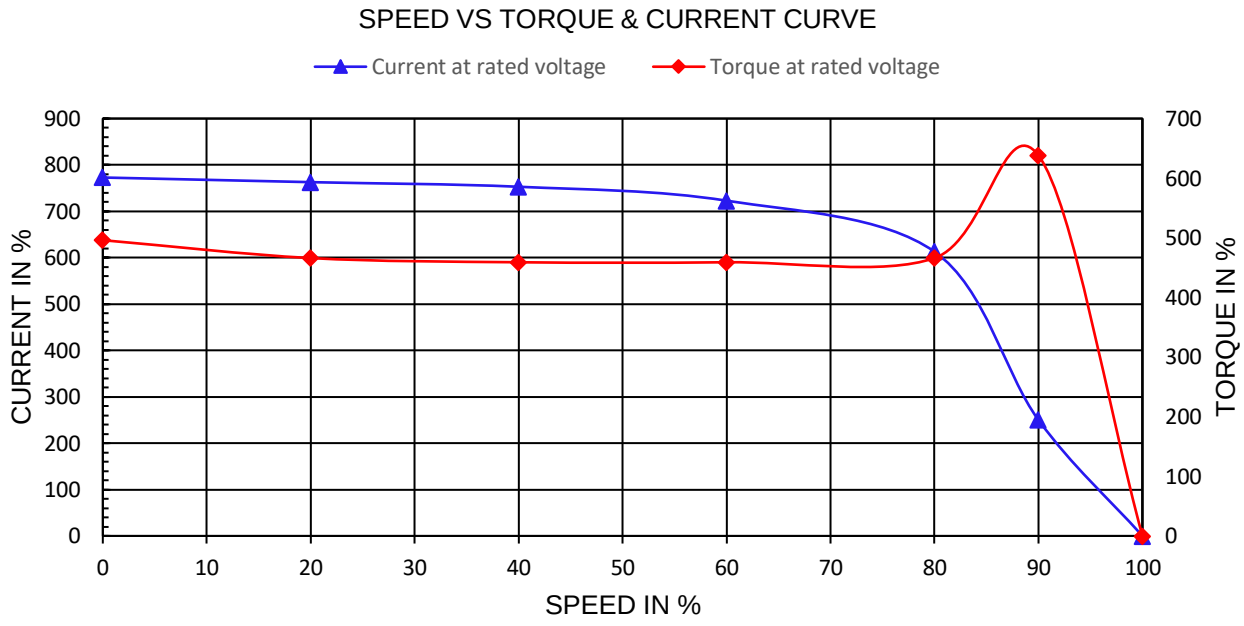

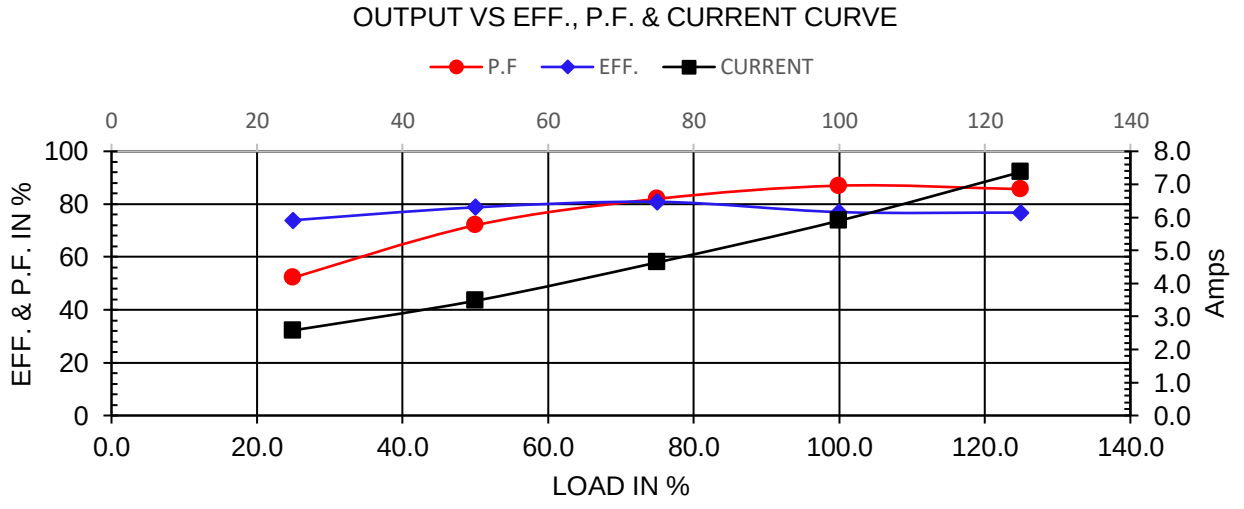

This document is the property of WorldWide Electric Corporation and may not be reproduced without express authorization.

NAMEPLATE / WIRING

Premium Efficiency Motor: **LAM5-36-184TC**

WorldWide Electric Corporation
1 (800) 808-2131
Worldwideelectric.net

Document Generated:	18-Jul-2023
Document ID:	

Customer:

SAMPLE NAMEPLATE DATA

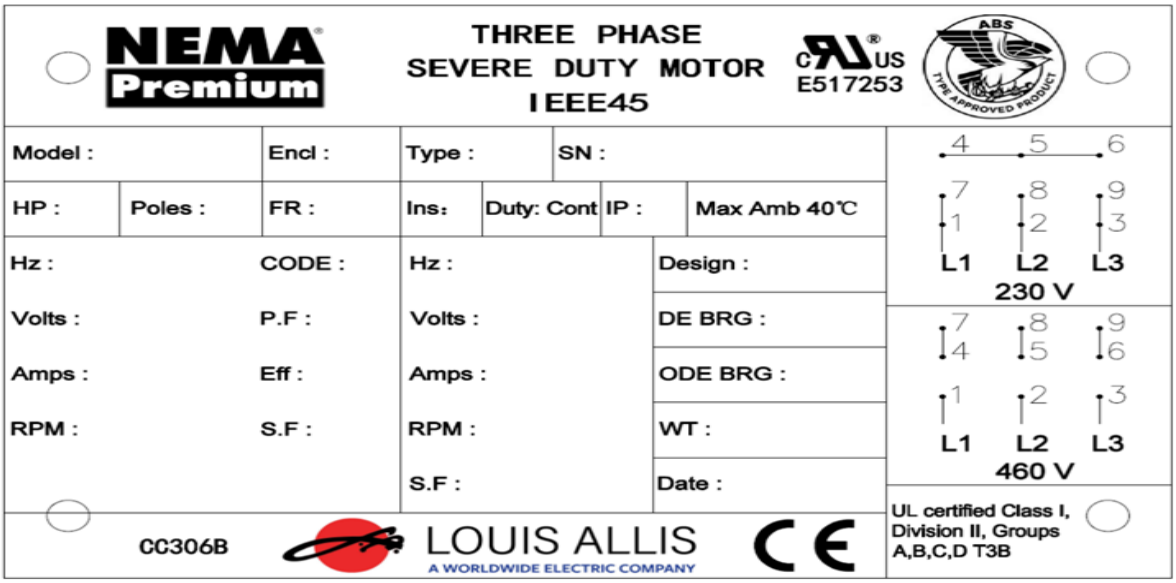

Model:	LAM5-36-184TC	**Encl:**	TEFC	**Type:**	AEH3				
HP:	5	**Poles**	2	**FR:**	182/4TC	**Ins:**	F	**IP:**	55
Hz:	60	**CODE:**	J	**Hz**	50	**HP:**	5	**Design:**	B
Volts:	230/460	**P.F:**	0.89	**Volts:**	190/380			**DE BRG:**	6306 ZZ
Amps:	11.8/5.9	**Eff:**	0.885	**Amps**	14.2/7.1			**ODE BRG:**	6305 ZZ
RPM:	3520	**S.F:**	1.25	**RPM**	2890			**WT:**	101.4 lbs.
				S.F:	1.00				

This document is the property of WorldWide Electric Corporation and may not be reproduced without express authorization