HYUNDAI HEAVY INDUSTRIES CO.,LTD.

WORLDWIDE Electric Corp

AC INDUCTION MOTOR DATA SHEET
CROWN TRITON™ MOTORS

MODEL NUMBER	**HHI25-18-284TC**		
HORSEPOWER	**25**		
RPM / POLES	**1800 / 4**		
VOLTAGE / PHASE	**230 / 460 V / 3**		
FRAME	**284TC**		
ENCLOSURE / DEGREE OF PROTECTION	**TEFC / IP55**		
FREQUENCY	**60 HZ**		
FULL LOAD SPEED	**1775 RPM**		
SERVICE FACTOR	**1.15 SF at 40° C / 1.0 SF at 65° C**		
INSULATION CLASS	**F Class N Varnish**		
FULL LOAD AMPS; 230 / 460	**60.6 / 30.3 A Usable On 208 V At 67.0 A**		
LOCKED ROTOR CURRENT (% Full Load)	**680 / 680 %**		
NEMA CODE LETTER	**H**		
EFFICIENCY / POWER FACTOR	LOAD	EFF.	P.F.
	100 %	**93.6 %**	**82.0 %**
	75 %	**93.8 %**	**79.5 %**
	50 %	**92.9 %**	**73.0 %**
DUTY CYCLE	**S1 / Continuous**		
TORQUE	FULL LOAD	LRT	BDT
	73.4 lb.ft.	**170 %**	**220 %**
NEMA DESIGN	**B**		
MOMENT OF INERTIA	LOAD (Max.)		MOTOR
	327.481 lb.ft.^{2}		**3.940 lb.ft.^{2}**
SOUND PRESSURE LEVEL (No Load 1 M From Motor)	**75 dB(A)**		
NUMBER OF STARTS (Hot / Cold)	**2 Hot / 3 Cold**		
MAX. AMBIENT TEMPERATURE	**40° C at 1.15 SF / 65° C at 1.0 SF**		
MAX. ELEVATION	**3300 Ft. Above Sea Level**		
TEMPERATURE RISE (At Full Load)	**80° C**		
DRIVE-END BEARING	**6310ZC3**		
OPPOSITE DRIVE-END BEARING	**6310ZC3**		
GREASE TYPE	**Mobil Polyrex EM**		
MOUNTING	**F1 (F2 Suitable), W6, W8, B3, V5, V6**		
ROTATION	**Bi-Directional**		
APPROXIMATE WEIGHT	**380 lbs.**		
AREA CLASSIFICATION	**Class I, Division 2, Groups A, B, C, D**		
INVERTER RATING	**10:1 CT / 20:1 VT - Meets NEMA MG1 Part 31**		
SPECIFICATION - In Accordance With	**NEMA, CSA**		

C US CSA EEV 109973 CC 038A CE ABS TYPE APPROVED PRODUCT

REVISED 01/11/17

HYUNDAI HEAVY INDUSTRIES CO., LTD.

TEFC

THREE PHASE INDUCTION MOTOR

TYPE LP, JP

CAST IRON FRAME

FRAME SIZE	OUTPUT(HP)	POLES	Hz	TIME RATING

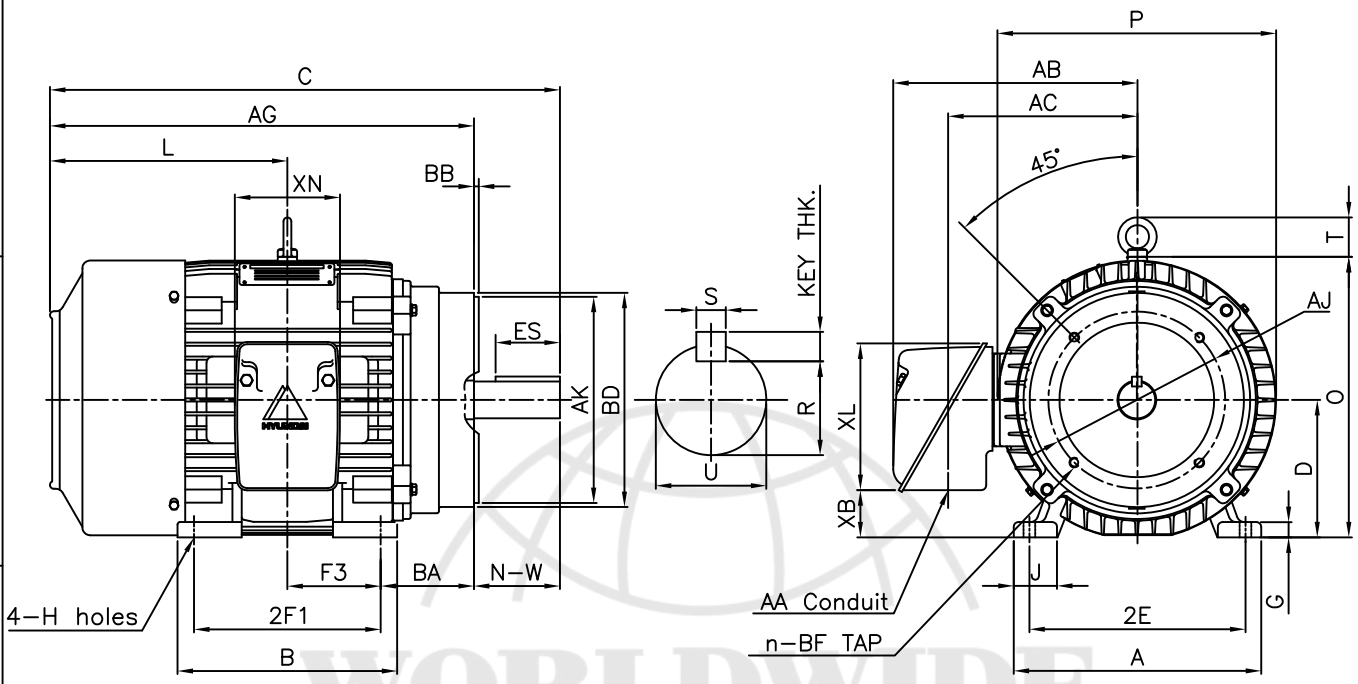

DIMENSIONS

FLANGE						MOUNTING								
AJ	AK	BD	BB	BF	n	A	B	2E	2F1	2F2	F3	G	J	H
9.00	10.50	10.9	0.25	1/2–13	4	12.60	11.18	11.00	9.50	–	4.75	0.78	2.20	0.53

CONDUIT BOX						OVERALL								APPROX. WGT.(LB)
AA	AB	AC	XB	XL	XN	AG	BA	C	D	L	O	P	T	
1.50	12.43	9.64	3.42	7.56	6.61	21.59	4.75	26.21	7.00	12.09	14.28	14.19	2.01	380

SHAFT					KEY THK.	BEARING	
U	N–W	KEYWAY				DRIVE END	OPP. DRIVE END
		R	ES	S			
1.875	4.62	1.591	3.28	0.500	0.500	6310ZC3	6310ZC3

NOTE

1. Dimension "D" tolerance : +0.00inch – 0.03inch
2. Dimension "U" tolerance : +0.000inch – 0.0005inch
3. Dimension "R" tolerance : +0.000inch – 0.015inch

APPD BY	KIM.Y.S	UNIT	INCH
CHKD BY	KO.S.H	SCALE	1/10
CHKD BY		PROJEC'N	3rd Angle
DSND BY	Y.J.HWANG	DATE	2004.11.19

SUBJECT	NEMA 284TC	CAD PROJ \ FILE: XSMOUTIN\A1309AA
TITLE	OUTLINE	

HYUNDAI HEAVY INDUSTRIES CO., LTD.
Electro–Electric System Division

REF. NO	A1309AA	Sheet No. of
DWG NO	350A1309AA	Revision No. 0

WORLDWIDE Electric Corp.

HYUNDAI HEAVY INDUSTRIES CO.,LTD.

PERFORMANCE CURVE

CURVE NO.

P-PLP284SR2

Type :	PLP		
Full Load Torque :	73.4	lb.ft	
Motor moment of Inertia (J) :	3.940	lb.ft ^{2}	
Load moment of Inertia (J) :	327.481	lb.ft ^{2}	

18.5 kW	25 HP	60 Hz		
4 P	Rated Speed :	1775 RPM		
Rated Voltage	575V	460V	230V	
Full Load Current	24.2A	30.3A	60.6A	

SPEED VS TORQUE & CURRENT CURVE

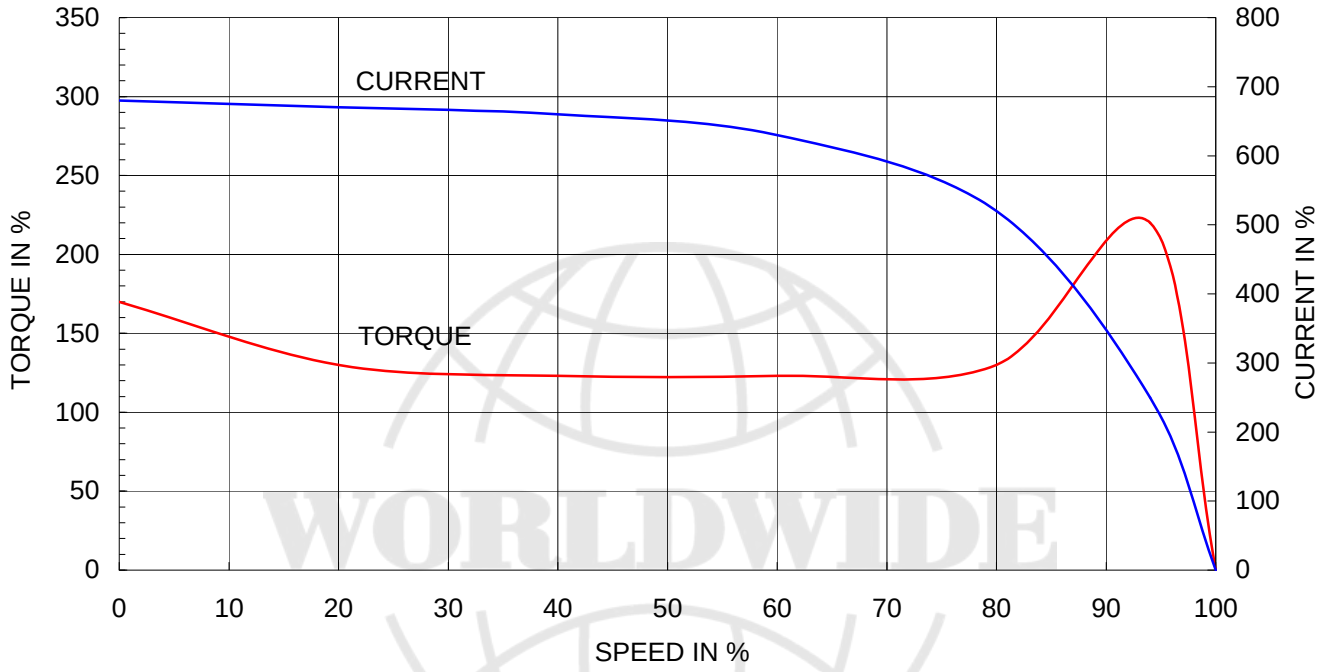

OUTPUT VS EFF., P.F & CURRENT CURVE

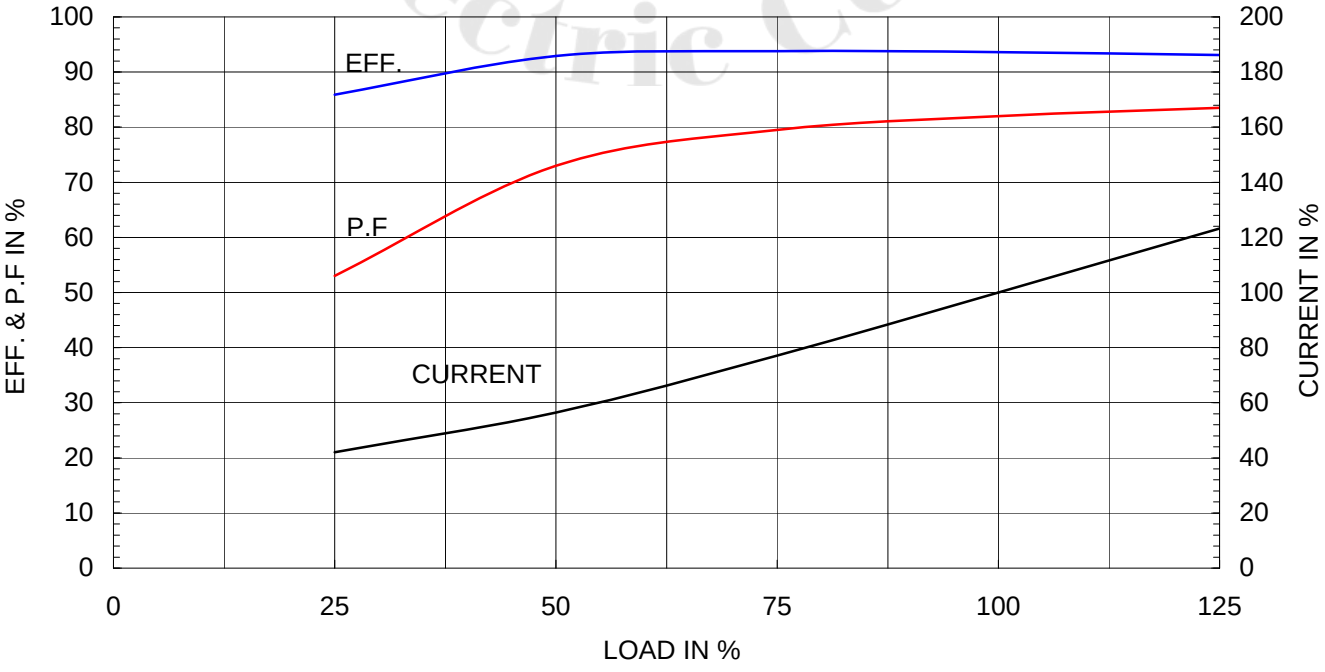

WORLDWIDE Electric Corp

HYUNDAI HEAVY INDUSTRIES CO.,LTD.

THERMAL LIMIT & TIME CURRENT CURVE

CURVE NO.

T-PLP25-18-284TC

Type :	PLP25-18-284T	
FULL LOAD TORQUE :	73.4	lb.ft
J OF LOAD :	-	lb.ft²
J OF MOTOR :	3.9	lb.ft²

25 HP 4 P 60 Hz

RATED SPEED : 1775 rpm

VOLTAGE	460 V	575 V
RATED CURRENT	30.3A	24.2A

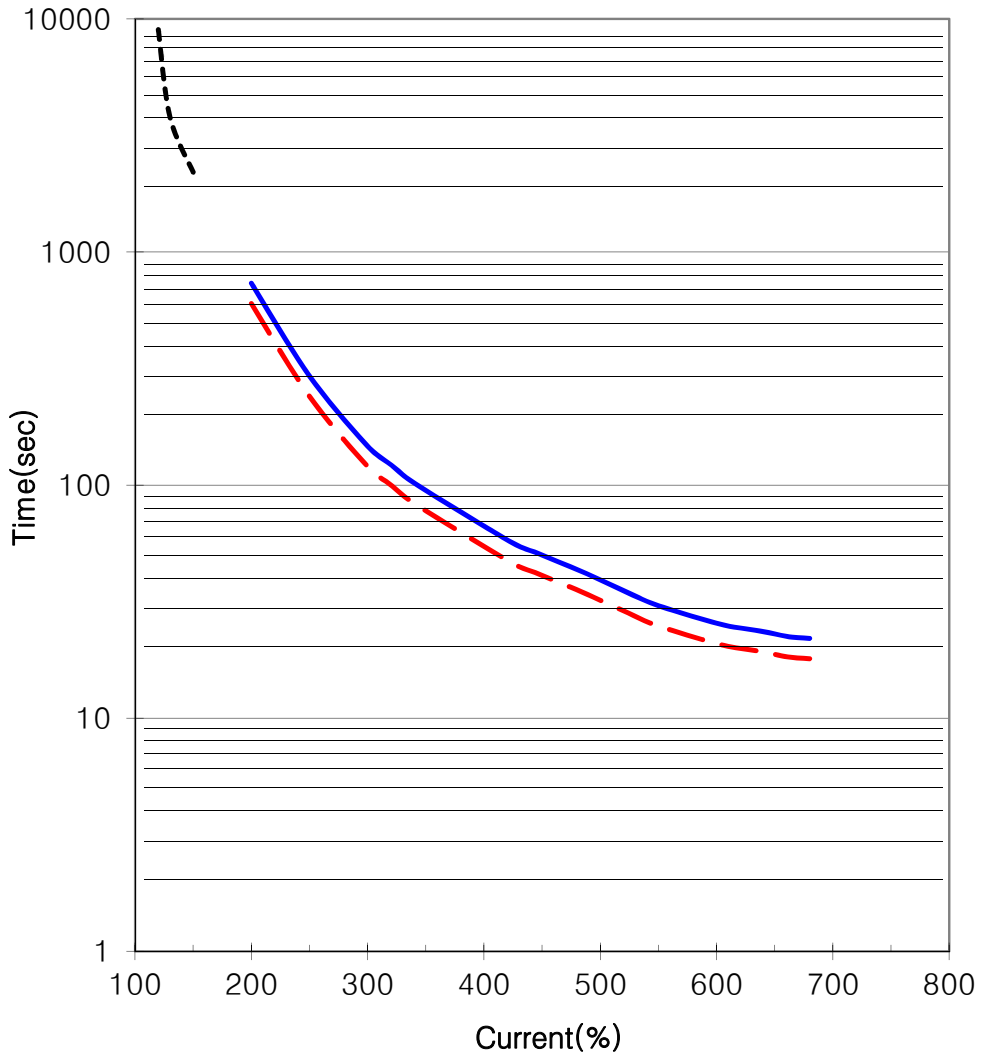

STARTING TIME	SAFE STALL TIME
- at rated voltage starting	18 sec. at Hot condition
- at 80% of rated voltage starting	22 sec. at Cold condition

HYUNDAI HEAVY INDUSTRIES CO., LTD.

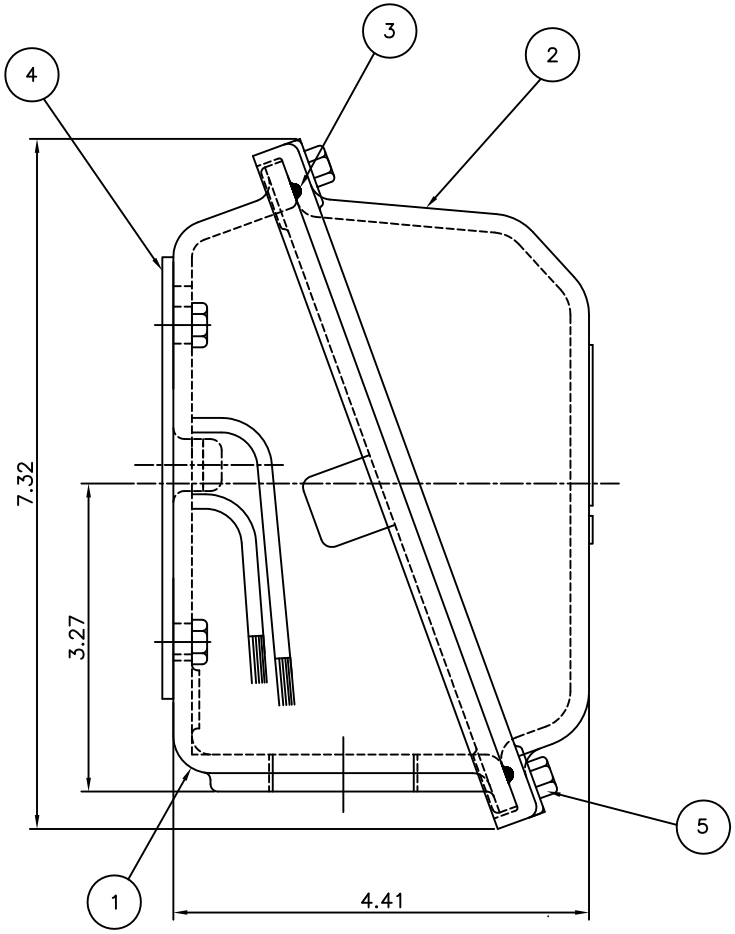

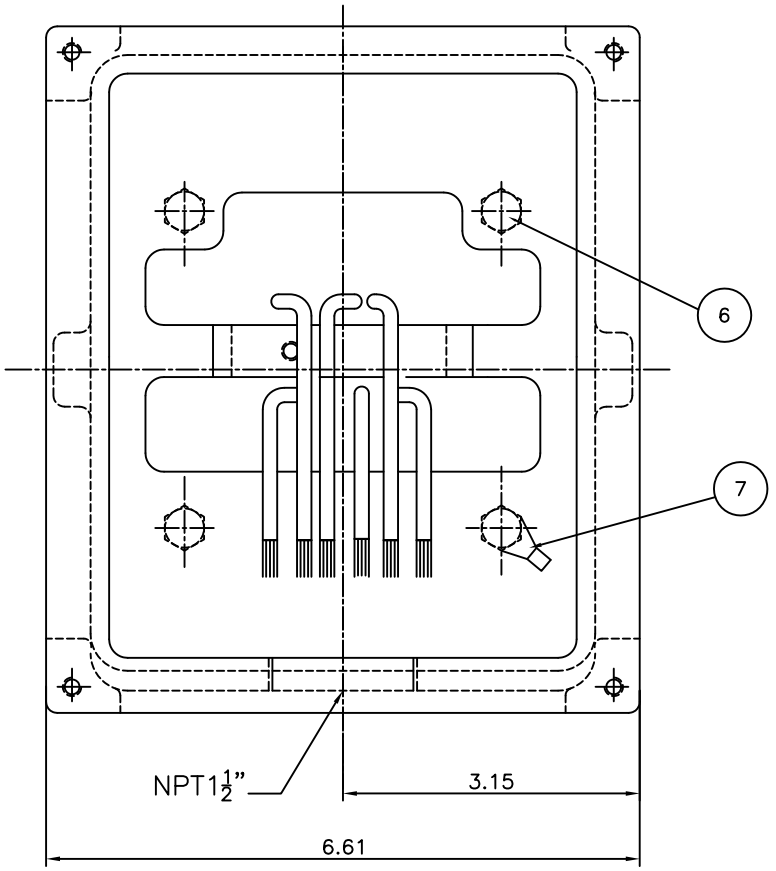

PT	DESPRIPTION	MATERIAL	DIMENSION	Q'TY
1	CONDUIT BOX	FC15	--	1
2	CONDUIT BOX COVER	FC15	--	1
3	O-RING / COVER	EPDM	ø4	1
4	BOX GASKET	NBR	--	1
5	COVER+BOX HEX BOLT	S45C	M6 X L20	4
6	BOX+FRAME HEX BOLT	S45C	M8 X L20	4
7	GROUND TERMINAL LUG	CU	--	1

REV	DATE	CONTENTS	REVD BY	CHKD BY	CHKD BY	APPD BY

Q'TY	DESCRIPTION	MATERIAL	DIMENSION	WEIGHT	PART NO.	REMARK	NO.

APPD BY	KIM.Y.S	UNIT	INCH
CHKD BY	KO.S.H	SCALE	1:1
CHKD BY	---	PROJEC'N	3 각법(3rd Angle)
DSND BY	Y.J.HWANG	DATE	2005.02.16

HYUNDAI HEAVY INDUSTRIES CO., LTD.
ELECTRICAL ENGINEERING DIVISION

SUBJECT	NEMA284/286	CAD PROJ 명 \ FILE 명	227B8008NA1
TITLE	TERMINAL BOX ASSEMBLY		
REF. NO	227B8008NA2	Sheet No.	of
DWG NO	227B8008NA2	Revision No.	0

THIS DRAWING IS PROPRIETARY TO HHI. NO PART OF THIS DRAWING MAYBE REPRODUCED WITHOUT THE PERMISSION OF HHI.